Sensor-switched LED floodlight

# XLED home 2 S

white
EAN 4007841 033088
Article number 033088
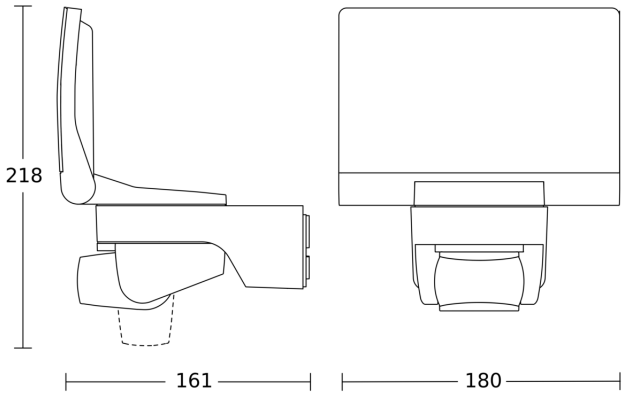
## Dimension Drawing